3040-W

Surface mount panic switch, latching red LED indicator and screw terminals, SPDT, white

The Sentrol 3040/3050 series Panic Switch activates the alarm output when the user pulls the actuating lever. On the 3040 model, an external LED lights and latches, indicating that the alarm circuit has been activated. The lever is closed first to rearm the alarm switch, then the latching LED circuit is reset externally at the control panel. The 3045 model has no LED or latching circuit. The 3050 model feature a glowing LED for low light visibility. The LED glows green when powered up, turns red upon activation. The 3050 also contains a latching LED.



Applications

Mounted out of sight but within easy reach for manual activation, such as under desks or counters in banks, jewelry stores and other facilities where people or property are at risk. The 3045 model can be used in residential installations when a panic switch is needed. Models with the LED and latching circuit can be used in commercial and high risk applications.

Details

- Mounts underneath or on side of desk or counter
- Smooth housing prevents accidental damage to clothing
- Actuating lever designed to accommodate only tip of finger
- Reed contact resets when lever is in closed position
- Version with latching LED available

3040-W

Surface mount panic switch, latching red LED indicator and screw terminals, SPDT, white

Technical specifications

General

Type	Switch
Water resistant	No
LED	Yes
Latching LED circuit	Yes
Alarm contact	SPDT
Alarm indication	Red LED
Connections	Screw terminals

Wired/wireless

Wired-wireless	Wired

Electrical

Power supply value	7 to 15 VDC
Current consumption	8 mA

Physical

Physical dimensions	74 x 45 x 19 mm (L x W x H)
Colour	White

Environmental

Operating temperature	-18 to +43°C

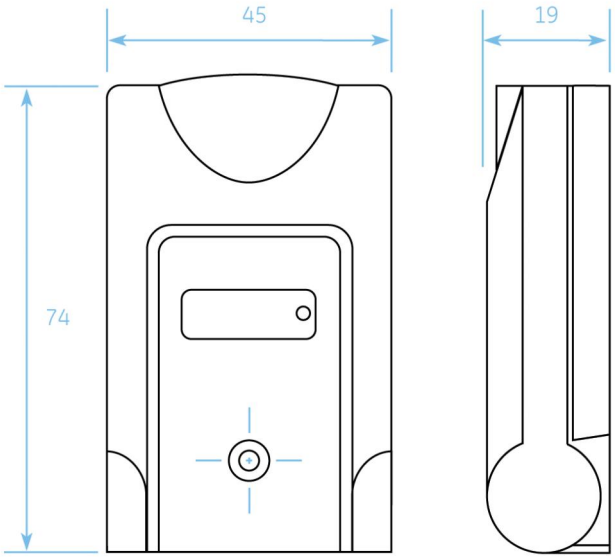

As a company of innovation, Kidde Global Solutions reserves the right to change product specifications without notice. For the latest product specifications, visit firesecurityproducts.com online or contact your sales representative.

Last updated on 18 June 2026 - 14:23