# TVP-PMB-03

## TruVision PTZ Pendant Mount bracket

### General

The TruVision TVP-PMB-03 pendant mount bracket can be used to install IP PTZ cameras on a ceiling.



### Dettagli

- Pendant mount bracket to be mounted on horizontal ceiling
- Compatible with selected PTZ cameras

# TVP-PMB-03

## TruVision PTZ Pendant Mount bracket

## Specifiche tecniche

### General

| | |
|---|---|
| Bracket type | Camera |
| Support type | PTZ  camera |
| Bracket mounting part | Mounting bracket |
| Mount type | Pendant mount |
| Cable management | Yes |

### Physical

| | |
|---|---|
| Physical dimensions | 117 x 117 x 105 mm |
| Net weight | 750 g |
| Colour | Grey |
| Material | Aluminium alloy |

### Environmental

| | |
|---|---|
| Environment | Indoor, Outdoor |

### Prodotti compatibili

| Categoria | Riferimento | Descrizione |
|---|---|---|
| Camera | TVGP-P02-0401-PTZ-G | TruVision 4MP IP PTZ camera, H.265+, 300m IR, 25x zoom, Super Low Light, IP67, IK10, NEMA 4X, Hi-PoE/36VDC |
| Camera | TVGP-P02-0402-PTZ-G | TruVision 4MP IP PTZ camera, H.265+, 400m IR, 42x zoom, Super Low Light, IP67, IK10, NEMA 4X, Hi-PoE/36VDC |

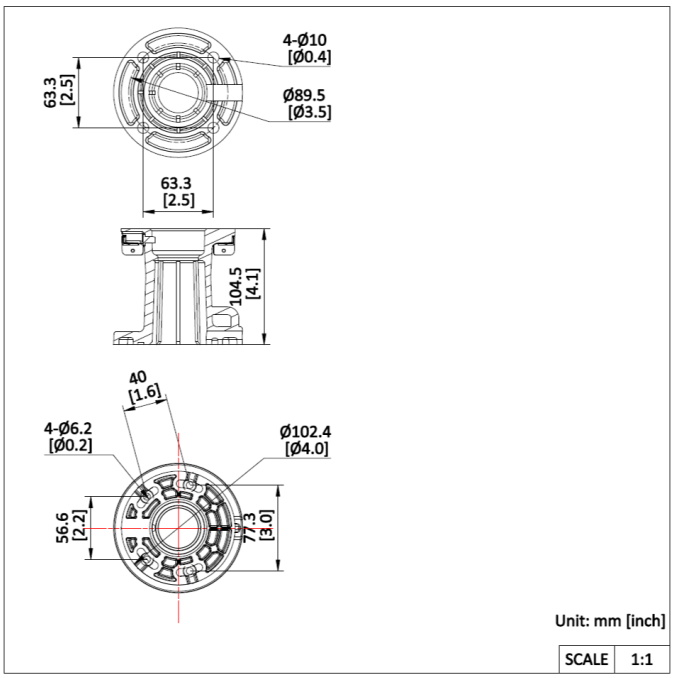


In quanto azienda in continua innovazione, Kidde Global Solutions si riserva il diritto di modificare le specifiche del prodotto senza preavviso. Per avere informazioni sempre aggiornate, visita it.firesecurityproducts.com online o contatta il tuo riferimento commerciale.

Last updated on 12 November 2026 - 18:57