TVD-5402

Câmara Mini Dome IP, H.264/H.265, 3MPX, Varifocal Motorizada 2.8 a 12mm, Áudio, LEDs IR-TruVision



TVD-5402

Câmara Mini Dome IP, H.264/H.265, 3MPX, Varifocal Motorizada 2.8 a 12mm, Áudio, LEDs IR-TruVision

Especificações técnicas

General

Technology	IP
Video standard	NTSC, PAL
Image settings	Hallway View, Mirror, ROI (Region Of Interest)
Video output	BNC Composite PAL / NTSC
Software compatibility	OnGuard, Prism, TruVision Navigator, TVRmobile, Web Browser

Camera

Sensor size	1/2.8"
Max. resolution	3 MP
Sensor scan	Progressive
Sensor type	CMOS

Lighting performance

WDR type	True WDR
Day/night	True Day/Night
Motorized IR cut filter	Yes
Infrared (IR)	Yes

Encoding

Sub stream compression	H.264, MJPEG
Sub stream resolutions	176 x 144 (QCIF), 352 x 288 (CIF), 704 x 576 (4CIF)

Lens

Lens type	Varifocal motorized
Auto iris	Yes
Auto focus	Yes
Motorized zoom	Yes

Network

Integration	CGI, ONVIF, PSIA
Supported network protocols	802.1x, DDNS, DHCP, DNS, ezDDNS, FTP, HTTP, HTTPS, IPv4, IPv6, NTP, PPPoE, QoS, RTP, RTSP, SMTP, SNMP, TCP/IP, UPnP

Audio

Audio compression	G.711, G.722.1, G.726, MP2L2

Alarm I/O

Alarm inputs	1

Storage

Local storage support	Yes

Video intelligence

Alarm trigger	Motion detection, Privacy Masking, Video tampering
Smart event	Advanced motion detection, Audio exception detection, Defocus, Defog, Electronic Image Stabilization (EIS), Face detection, Intrusion detection, Line crossing detection, Object counting, Object left behind, Object removal detection, Region entrance detection, Region exiting detection, Region of Interest (ROI), Scene change detection

Electrical

Power supply type	VDC

Physical

Colour	Grey
Form Factor	Dome

Environmental

Vandal proof	Yes
Impact rating	IK10
Environment	Indoor

Regulatory

Compliancy	CE, FCC, HALT, REACH, RoHS, UL, WEEE

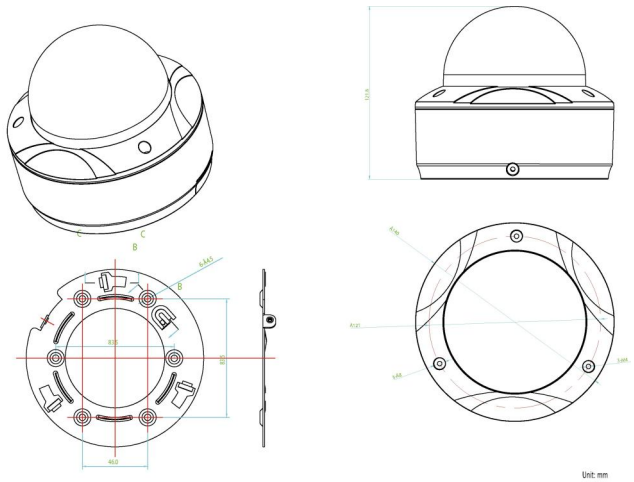

Como empresa de inovação, a Kidde Global Solutions reserva o direito de alterar as especificações do produto sem aviso prévio. Para obter informações sobre as especificações mais recentes do produto, visite pt.firesecurityproducts.com online ou contate o departamento comercial.

Last updated on 12 November 2026 - 18:57