AAECU-EOL

AlarmLine II Analogue EN LHD Replacement Part – EOL module

General

The AAECU-EOL is a replacement End-Of-Line unit for use with the AlarmLine II Analogue EN Liner Heat Detection (LHD) cable control unit. The AAECU control unit is supplied with an AAECU-EOL included, but in case the unit is lost or damaged then the AAECU-EOL can be supplied separately.



Details

- VdS EN54-22:2015/prA1:2007

AAECU-EOL

AlarmLine II Analogue EN LHD Replacement Part – EOL module

Technical specifications

Physical

Physical dimensions	100 x 35 x 60 mm (W x H x D) 4" x 1 3/8" x 2 3/8" (W x H x D)
Net weight	115 g
Mounting type	Oberflächenmontage
Material (body)	Aluminium

Environmental

Vandal proof	No
Operating temperature	-40 to +125°C
Relative humidity	0 to 99% ambient temperature -40 to +40°C / 0 to 75% ambient temperature greater than +40°C
IP rating	IP65

Regulatory

Certification	CE, EN54-22, VdS

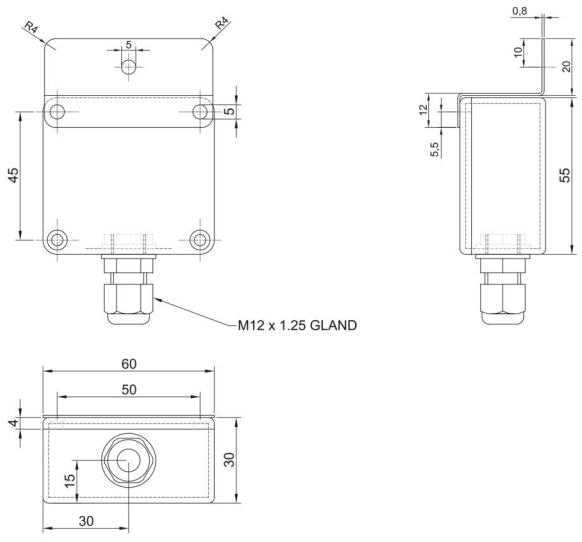

Figure 3. AlarmLine II Analogue EN EOL unit Dimensional Drawing

As a company of innovation, Kidde Global Solutions reserves the right to change product specifications without notice. For the latest product specifications, visit firesecurityproducts.com online or contact your sales representative.

Last updated on 3 February 2025 - 15:43