S30-RJ

SFP-Port 1000Base-T Mini-GBIC Module - 1 RJ45 Copper Port – 100m (0~50°C)

Overview

The KGS Fire & Security transceiver module is compliant with the SFP Multisource Agreement (MSA), these transceiver modules feature hot-plug capability for easy installation without interrupting host equipment operating online.



Dettagli

- SFP multi-source agreement compliant
- Data rate 1.25 Gbps
- Low power dissipation
- RJ-45 connector
- Low power dissipation
- Plug-and-play capability for easy installation
- Hot Pluggable
- 0ºC to +50ºC operation temperature
- TTL signal detect indicator
- Single power supply 3.3V
- Comply with the IEEE 802.3ab

S30-RJ

SFP-Port 1000Base-T Mini-GBIC Module - 1 RJ45 Copper Port – 100m (0~50°C)

Specifiche tecniche

General

Category	SFP
Port type	Kobber (RJ45)
Port speed	Gigabit

Environmental

Environment	Indendør

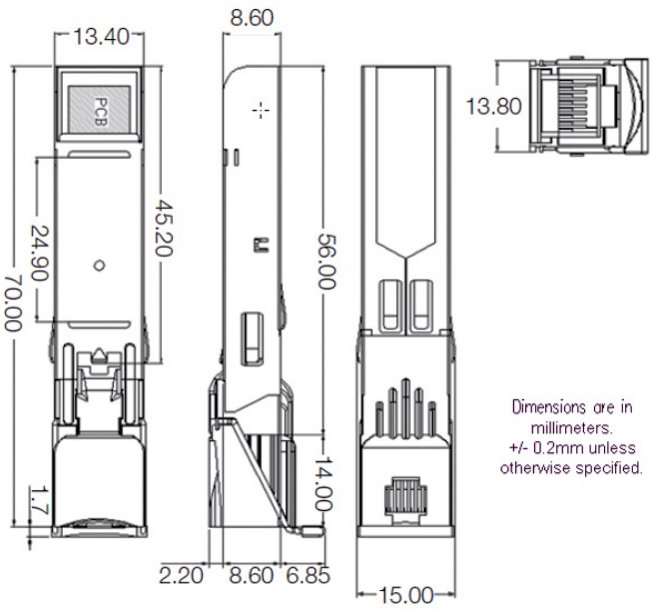

In quanto azienda in continua innovazione, Kidde Global Solutions si riserva il diritto di modificare le specifiche del prodotto senza preavviso. Per avere informazioni sempre aggiornate, visita it.firesecurityproducts.com online o contatta il tuo riferimento commerciale.

Last updated on 12 November 2026 - 20:20