# TVD-5402

**TruVision IP Mini Dome camera, H.265/H.264, 3 Mpx , 2.8 to 12mm gemotoriseerd objectief. Voeding POE (802.3-at) /12VDC, binnengebruik, IK10**



# TVD-5402

## TruVision IP Mini Dome camera, H.265/H.264, 3 Mpx , 2.8 to 12mm gemotoriseerd objectief. Voeding POE (802.3-at) /12VDC, binnengebruik, IK10

## Technische specificaties

### General

| | |
|---|---|
| Technology | IP |
| Video standard | NTSC, PAL |
| Image settings | Widok korytarzowy, Lustro, Pole uwagi (ROI) |
| Video output | BNC Composite PAL / NTSC |
| Software compatibility | OnGuard, Prism, TruVision Navigator, TVRmobile, Webbrowser |

### Camera

| | |
|---|---|
| Sensor size | 1/2.8" |
| Max. resolution | 3 MPX |
| Sensor scan | Progressiv |
| Sensor type | CMOS |

### Lighting performance

| | |
|---|---|
| WDR type | Echt-WDR |
| Day/night | Dzień/Noc z filtrem |
| Motorized IR cut filter | Yes |
| Infrared (IR) | Yes |

### Encoding

| | |
|---|---|
| Sub stream compression | H.264, MJPEG |
| Sub stream resolutions | 176 x 144 (QCIF), 352 x 288 (CIF), 704 x 576 (4CIF) |

### Lens

| | |
|---|---|
| Lens type | Zmienna zmotoryzowana |
| Auto iris | Yes |
| Auto focus | Yes |
| Motorized zoom | Yes |

### Network

| | |
|---|---|
| Integration | CGI, ONVIF, PSIA |
| Supported network protocols | 802.1x, DDNS, DHCP, DNS, ezDDNS, FTP, HTTP, HTTPS, IPv4, IPv6, NTP, PPPoE, Qos, RTP, RTSP, SMTP, SNMP, TCP/IP, UPnP |

### Audio

| | |
|---|---|
| Audio compression | G.711, G.722.1, G.726, MP2L2 |

### Alarm I/O

| | |
|---|---|
| Alarm inputs | 1 |

### Storage

| | |
|---|---|
| Local storage support | Yes |

### Video intelligence

| | |
|---|---|
| Alarm trigger | Motion detection, Maskowanie stref prywatnych, Video tampering |
| Smart event | Zaawansowana detekcja ruchu, Audio exception detection, Utrata ostrości, Defog, Elektroniczna stabilizacja obrazu (EIS), Wykrycie twarzy, Wykrywanie włamania i napadu, Line crossing detection, Zliczanie obiektów, Pozostawiony obiekt, Object removal detection, Wykrywanie wejścia do regionu, Region exiting detection, Pole uwagi (ROI), Zmiana sceny |

### Electrical

| | |
|---|---|
| Power supply type | VDC |

### Physical

| | |
|---|---|
| Colour | Grå |
| Form Factor | Dome |

### Environmental

| | |
|---|---|
| Vandal proof | Yes |
| Impact rating | IK10 |
| Environment | Indendør |

### Regulatory

| | |
|---|---|
| Compliancy | CE, FCC, HALT, REACH, RoHS, UL, WEEE |

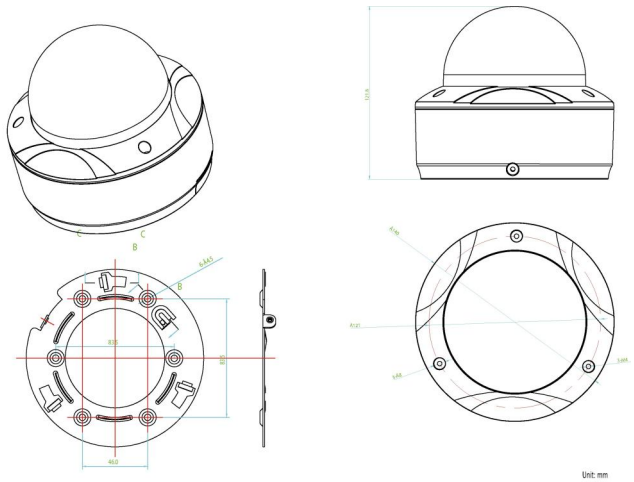

Als een bedrijf van innovatie behoudt Kidde Global Solutions zich het recht voor productspecificaties zonder kennisgeving te wijzigen. Ga voor de nieuwste productspecificaties online naar nl.firesecurityproducts.com of neem contact op met uw verkoopvertegenwoordiger.

Last updated on 12 November 2026 - 18:57